SPECIFICATION FOR APPROVAL

REF. :

PROD. NAME	Shielded SMD Power Inductor	ABC'S DWG NO.	ACU1048□□□□FB-□□□		
		REV.	20240229-C	PAGE	1

I．Configuration and dimensions：

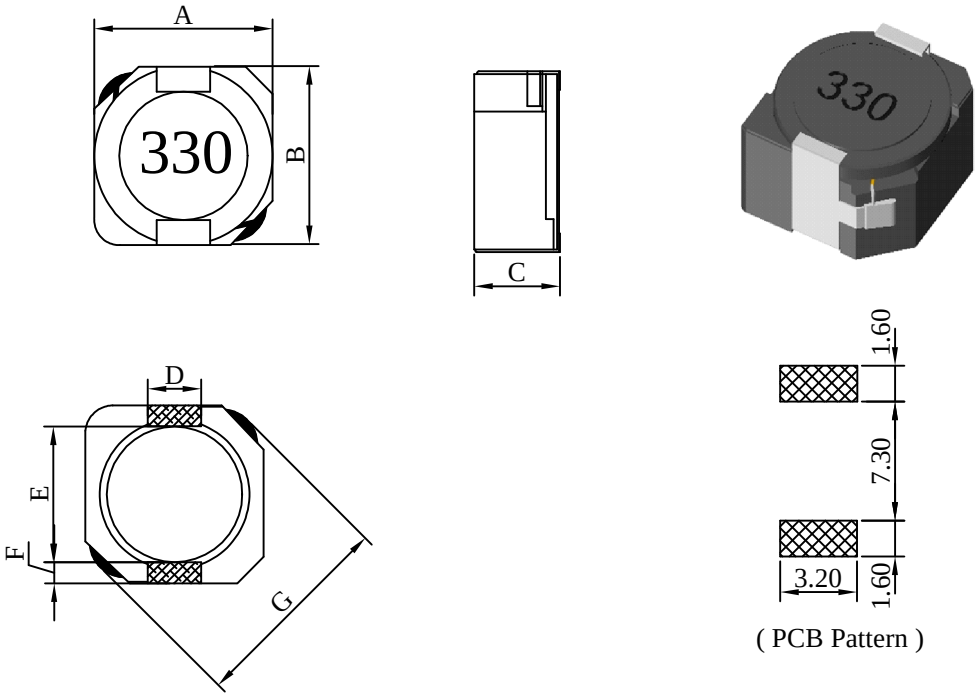

(PCB Pattern)

Unit：mm

A	B	C	D	E	F	G
10.00 ±0.3	10.20 ±0.3	4.80 ±0.3	3.00 ±0.3	7.80 ±0.4	1.20 ±0.15	13.00 ref.

II．Description：

a．Ferrite drum core construction
b．Magnetically shielded
c．Enamelled copper wire：H class
d．Product weight：1.850g（ref.）
e．Moisture sensitivity Level 1
f．Products comply with RoHS' requirements
g．Halogen free
h．AEC-Q200 Grade 0

III．General specification：

a．Operating temp.：-55℃----+150℃
(Temp. rise included.)
b．Resistance to solder heat：260℃.10 sec.

Peak temp.：245℃ max.
Max. peak temp. - 5℃：30sec.max.
Max time above 217℃ ：60sec.~150sec.max.

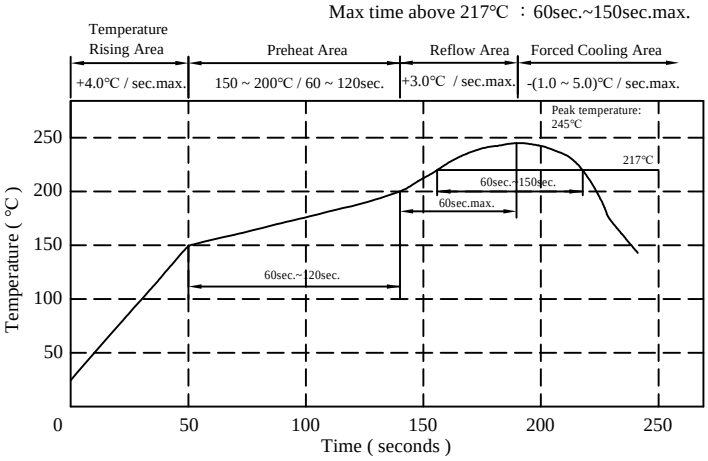

千如電子集團
ABC-ATEC ELECTRONICS GROUP

SPECIFICATION FOR APPROVAL

REF. :

PROD. NAME	Shielded SMD Power Inductor	ABC'S DWG NO.	ACU1048□□□□FB-□□□		
		REV.	20240229-C	PAGE	2

IV．Electrical characteristics：

DWG. No.	Inductance (μH)	Q ref.	Test Freq. (MHz)	SRF (MHz) ref.	RDC (mΩ) typ.	RDC (mΩ) max.	Isat (A) typ.	Irms (A) typ.
ACU1048R68YFB-□□□	0.68±30%	8.0	7.96	110.0	4.5	5.5	13.50	9.50
ACU10481R2YFB-□□□	1.2±30%	10.0	7.96	85.0	5.8	7.0	10.50	8.30
ACU10482R2YFB-□□□	2.2±30%	9.0	7.96	53.0	7.1	9.0	8.20	7.20
ACU10483R3YFB-□□□	3.3±30%	10.0	7.96	40.0	8.6	11.0	7.80	6.50
ACU10484R2YFB-□□□	4.2±30%	10.0	7.96	29.0	10.4	14.0	6.40	6.10
ACU10486R8YFB-□□□	6.8±30%	9.0	7.96	27.0	15.1	19.0	5.40	5.40
ACU10488R2YFB-□□□	8.2±30%	9.0	7.96	21.0	18.1	22.0	4.85	5.00
ACU1048100YFB-□□□	10.0±30%	52.0	2.52	16.5	23.0	31.0	4.45	4.50
ACU1048120YFB-□□□	12.0±30%	45.0	2.52	15.0	26.0	35.0	4.00	3.80
ACU1048150YFB-□□□	15.0±30%	46.0	2.52	14.0	35.0	47.0	3.60	3.40
ACU1048180YFB-□□□	18.0±30%	42.0	2.52	11.0	38.0	51.0	3.20	3.10
ACU1048220YFB-□□□	22.0±30%	33.0	2.52	10.5	46.0	62.0	2.95	2.90
ACU1048270YFB-□□□	27.0±30%	37.0	2.52	10.0	57.0	77.0	2.70	2.60
ACU1048330YFB-□□□	33.0±30%	37.0	2.52	9.0	69.0	93.0	2.40	2.50
ACU1048390YFB-□□□	39.0±30%	33.0	2.52	6.8	79.0	106.0	2.30	2.25
ACU1048470YFB-□□□	47.0±30%	28.0	2.52	5.9	94.0	127.0	2.00	2.00
ACU1048560YFB-□□□	56.0±30%	32.0	2.52	5.5	124.0	160.0	1.90	1.90
ACU1048680YFB-□□□	68.0±30%	30.0	2.52	5.0	138.0	208.0	1.65	1.60
ACU1048820YFB-□□□	82.0±30%	31.0	2.52	4.5	150.0	230.0	1.50	1.45
ACU1048101YFB-□□□	100.0±30%	29.0	0.796	4.2	179.0	255.0	1.35	1.35
ACU1048121YFB-□□□	120.0±30%	29.0	0.796	3.8	213.0	305.0	1.28	1.18
ACU1048151YFB-□□□	150.0±30%	28.0	0.796	3.6	253.0	370.0	1.12	1.10
ACU1048181YFB-□□□	180.0±30%	30.0	0.796	3.4	307.0	420.0	1.04	1.00
ACU1048221YFB-□□□	220.0±30%	25.0	0.796	3.0	373.0	500.0	0.94	0.94
ACU1048271YFB-□□□	270.0±30%	26.0	0.796	2.4	491.0	675.0	0.84	0.80
ACU1048331YFB-□□□	330.0±30%	27.0	0.796	2.0	613.0	815.0	0.75	0.73
ACU1048471YFB-□□□	470.0±30%	33.0	0.796	1.8	990.0	1200.0	0.70	0.60

1). Electrical specifications at 25℃

2). Inductance test condition.：100kHz / 0.1V

3). Irms base on temp. rise 40℃ typ.

4). Isat base on △ L/L0A＝35％ typ.

千如電子集團
ABC-ATEC ELECTRONICS GROUP

SPECIFICATION FOR APPROVAL

REF. :

PROD. NAME	Shielded SMD Power Inductor	ABC'S DWG NO.	ACU1048□□□□FB-□□□		
		REV.	20240229-C	PAGE	3

V．Curve：

ACU10482R2YFB

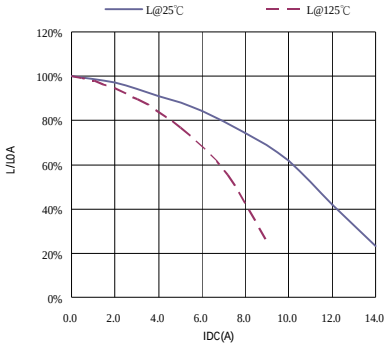

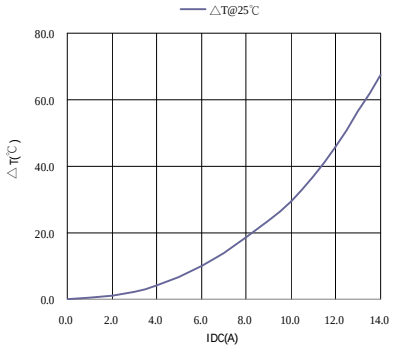

ACU1048100YFB

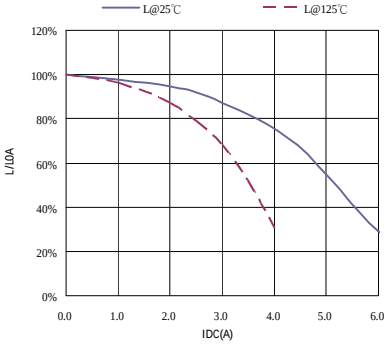

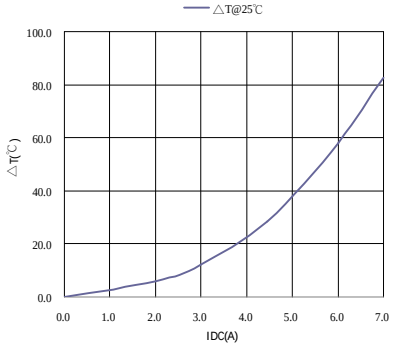

ACU1048270YFB

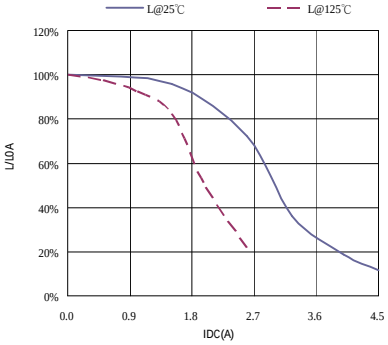

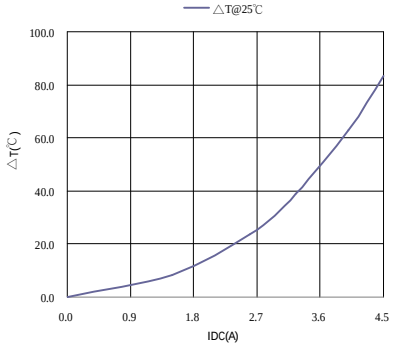

ACU1048221YFB

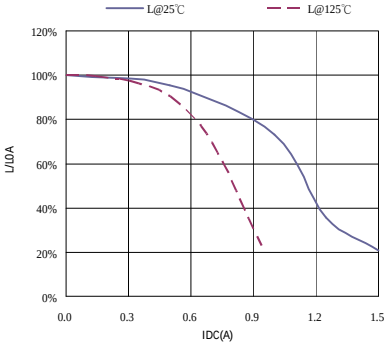

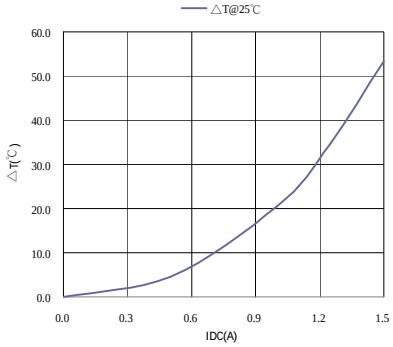

千如電子集團
ABC-ATEC ELECTRONICS GROUP

SPECIFICATION FOR APPROVAL

REF. :

PROD. NAME	Shielded SMD Power Inductor	ABC'S DWG NO.	ACU1048□□□□FB-□□□		
		REV.	20240229-C	PAGE	4

VI . Packaging information：

(1) Configuration

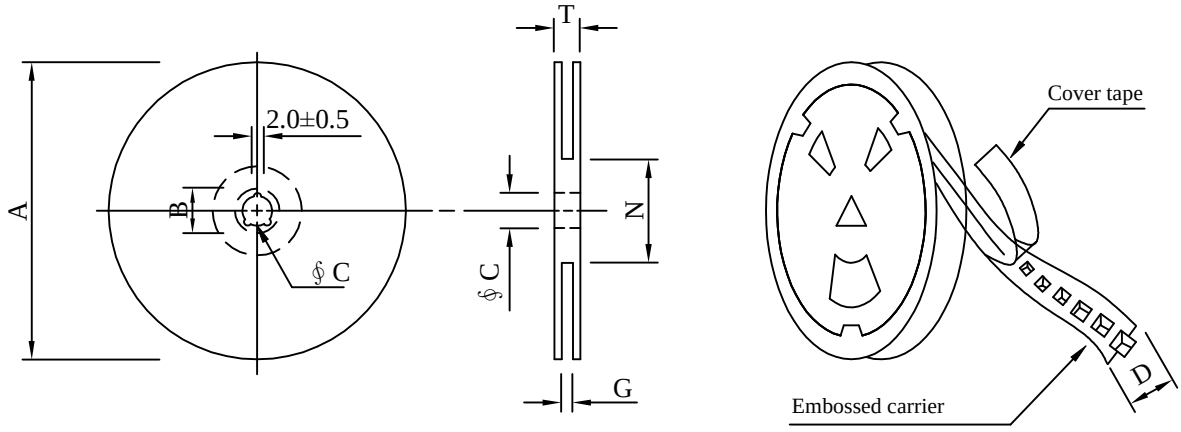

※Carrier tape width : D

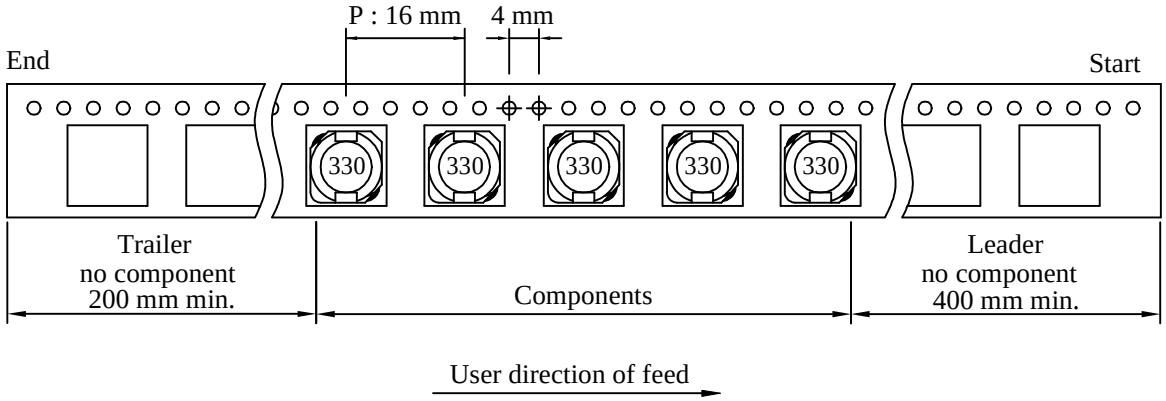

(2) Dimensions

Unit:mm

Style	A	B	C	D	G	N	T
13 - 24	330	21±0.8	13±0.5	24	26^{+0}	60^{-0}	30.4

(3) Q'TY & G.W. Per package

Code	Inner : Reel			Outer : Carton		
	Q'TY (pcs)	G.W. (g)	Style	Q'TY (pcs)	G.W. (kg)	Size (cm)
B	700	1,720	13 - 24	2,800	8.1	38 x 37 x 22

千如電子集團
ABC-ATEC ELECTRONICS GROUP

SPECIFICATION FOR APPROVAL

REF. :

PROD. NAME	Shielded SMD Power Inductor	ABC'S DWG NO.	ACU1048□□□□FB-□□□		
		REV.	20240229-C	PAGE	5

VII．Drawing number expression：

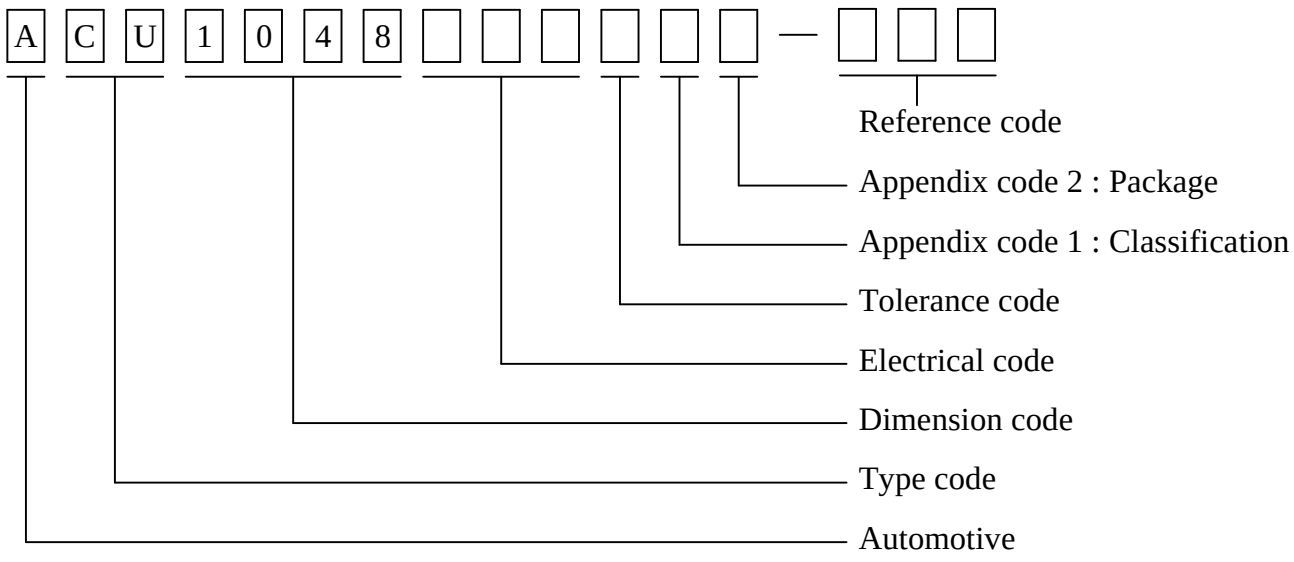

Appendix code 1：Product Classification

Appendix code 2：Package Information

Code	Inner package	Cover tape	Carrier tape	Bag	Package Q'TY	Remark
B	T /R (Reel package)	UCT	Antistatic	Antistatic	700 pcs	

千如電子集團
ABC-ATEC ELECTRONICS GROUP

SPECIFICATION FOR APPROVAL

REF. :

PROD. NAME	Shielded SMD Power Inductor	ABC'S DWG NO.	ACU1048□□□□FB-□□□		
		REV.	20240229-C	PAGE	6

VIII．Reliability test：

Item	Reference documents	AEC-Q200 Test Condition	Specification
1.High Temperature Exposure	MIL-STD-202 Method 108	1.Temperature: 150℃ 2.Time:1000 hours.	1.No mechanical or electrical damage. 2.Inductance shall not change more than ±20%.
2.Temperature Cycling	JESD22 Method JA-104	1.Temperature: -55℃ ~ 150℃ 2.Number of cycle:1000 cycles 3.Dwell time:30 minutes	1.No mechanical or electrical damage. 2.Inductance shall not change more than ±20%.
3.Biased Humidity Test	MIL-STD-202 Method 103	1.Temperature：85±5 ℃ 2.Time:1000 Hours 3.Humidity：85±5% RH.	1.No mechanical or electrical damage. 2.Inductance shall not change more than ±20%.
4.Operational Life	MIL-PRF-27-3.26/4.7.23 & User Spec.	1.Temperature: 150℃(Temp. rise included) 2.Time:1000 hours. 3.Apply rated current.	1.No mechanical or electrical damage. 2.Inductance shall not change more than ±20%.
5.External Visual	MIL-STD-883 Method 2009	Inspect product constructions, marking and workmanship.	1.No pollution on the surface of products. 2.Clear marking. 3.No crack.
6.Physical Dimensions	JESD22 Method JB-100	Verify physical dimensions to the applicable product detail specification.	Per product specification standard
7.Resistance to solvents	MIL-STD-202 Method 215	Immerse into solvent for 3±0.5 minutes & brush 10 times for 3 cycles.	1.No body deformation change in appearance or obliteration of marking. 2.Inductance shall not change more than ±20%.
8.Mechanical Shock	MIL-STD-202 Method 213	1.Peak acceleration100g`s 2.Duration of pulse：6ms 3.Waveform：Half-sine 4.Velocity change：12.3ft/sec 5.Direction：±X, ±Y, ±Z (3times / axis)	1.No mechanical or electrical damage. 2.Inductance shall not change more than ±20%.
9.Vibration Test	MIL-STD-202 Method 204	1.Frequency and Amplitued :10-2000-10 Hz 2.Sweep time：20 min 3.Acceleration：5g 4.Direction：X , Y , Z 5.Number of sweep：12 time/axis	1.No mechanical or electrical damage. 2.Inductance shall not change more than ±20%.
10.Resistance To Soldering Heat Test	MIL-STD-202 Method 210 & J-STD020D.1	a) Reflow： 1.Highest temperature：245±5 ℃. 2.Time(temp.≧ 217℃): 60~150seconds. 3.Reflow times: 3 times. b) DIP： 1. Temperature：260±5℃. 2. Time：10 sec. 3. Number of times：1 time.	1.No mechanical or electrical damage. 2.Inductance shall not change more than ±20%. 3.RDC shall conform to specification requirements.
11.ESD	AEC-Q200-002 or ISO/DIS 10605	1.ESD Voltage：15kV 2.Mode 1：150 pF / 330 Ω 3.Mode 2：150 pF / 2000 Ω 4.Discharge times and polarity： 3 times pos. / 3 times eng. for each condition	1.No mechanical or electrical damage. 2.Inductance shall not change more than ±20%.
12.Solderability Test	J-STD-002	a) Reflow： 1. Baking in pre-testing:150±5℃/16Hours±30 min. 2.Peak temperature：240±5℃. 3.Time(temp.≧ 217℃): 60~150seconds. 4.Reflow times: 1 time.	Product terminals should be wetted.
		b) DIP： 1. Baking in pre-testing: 150±5℃/16 Hours±30 min. 2. After fluxing,inductor shall be dipped in a melted solder pot at 240±5℃ for 5±0.5 seconds.	More than 95% soldering coverage min on terminations.
13.Electrical Characteriazation	MIL-STD-202 Method 304 & User Spec.	1.Operating temperature：-55℃~150℃ 2.Room temperature：25℃.	1.No mechanical or electrical damage. 2.Inductance shall not change more than ±20%.
14.Flammability			
15.Board Flex	AEC-Q200-005	1.Deflection speed：1 mm/ sec 2.Amount of deflection：2 mm 3.Span：90 mm 4.Direction for test：Bottom of PCB 5.Holding time : 60 sec	1.No mechanical or electrical damage. 2.Inductance shall not change more than ±20%.
16.Terminal Strength Test	AEC-Q200-006	1.Apply push force to samples mounted on PCB. 2.Force of 1.8 kg for 60±1 seconds.	After test, inductors shall be no mechanical damage.

千如電子集團
ABC-ATEC ELECTRONICS GROUP

SPECIFICATION FOR APPROVAL

REF. :

IX．Safety notes：

1. Products do not be used in related applications that directly affect the personal safety system or cause significant impacts and losses on society. If you apply to these applications, please be sure to contact us at first to confirm.
   產品不可使用於直接影響人身安全系統或對社會會造成重大影響與損失之相關用途，若您應用於此，請務必優先與我們聯繫確認。
2. The storage period is less than 12 months. Ensure to follow the storage conditions (Temperature: 5 to 30°C, Humidity: 10 to 60% RH or less). If the storage time is exceeded the limit, the electrodes might be deteriorate of terminal soldering.
   儲存期不超過12個月,務必遵守儲存條件（溫度：5至30℃，濕度：10至60％RH以下）。如果超過了儲存時間，端子電極可能會氧化而影響焊接。
3. Do not use or store in locations where there are conditions such as gas corrosion (salt, acid, alkali, etc.).
   不要在有氣體腐蝕等條件的地方使用或存放（鹽，酸，鹼等）。
4. Soldering corrections after mounting should be within the range of the conditions determined in the specifications. If overheated, a short circuit, performance deterioration, or lifespan shortening may occur.
   安裝時的焊接條件應在規格範圍內。如果超過要求，可能會發生短路，性能下降或壽命縮短。
5. When using, it should try to avoid excessive mechanical impact on the product, such as collision / drop ... and other reasons.
   使用時，應盡量避免產品受到過度機械衝擊，如碰撞/掉落...等原因。
6. When embedding a printed circuit board where a chip is mounted to a set, be sure that residual stress is not given to the chip due to the overall distortion of the printed circuit board and partial distortion such as at screw tightening portions.
   將已安裝新片的電路板組裝到裝置時，請注意應盡量避免電路板受到組裝變形...等，導致產品受到應力。
7. Self heating (temperature increase) occurs when the power is turned ON, so the tolerance should be sufficient for the set thermal design.
   產品會因通電而自我發熱(溫度上升)，因此在熱影響設計方面，需保留適當公差。
8. Do not expose the products to magnets or magnetic fields.
   請勿將產品暴露於磁鐵或是磁場中。
9. If you would like to use this products to performance and/or quality require a more stringent level of safety or reliability, or whose failure, malfunction or trouble could cause serious damage to society, person or property, or if you have special requirements exceeding the range or conditions set forth in the each catalog, please contact us.
   如果您希望將此產品用於性能和/或質量要求更嚴格的安全性或可靠性，或其失敗、故障或麻煩可能對社會、個人或財產造成嚴重損害，或者您有特殊情況要求超出目錄中規定的範圍或條件，請與我們聯繫。